MAX300-IG

Product Note GP-212J

Extrel® MAX300™-IG Process Mass Spectrometer

The MAX300-IG Industrial Gas Analyzer is the latest industrial system in the Extrel family of high performance quadrupole mass spectrometers. This seventh generation on-line process mass spectrometer is designed to meet the ever-changing needs of customers worldwide.

To complement your MAX300-IG system, Extrel offers the widest and most flexible array of inlet systems, including solenoids and both small and large internal diameter rotary valves. The MAX300-IG can be configured with as many sample positions as you need to optimize your application.

Hardware Specifications:	
Mass Analyzer:	3/4" (19 mm) High Transmission Quadrupole Mass Filter
Mass Range:	2 - 250 amu standard, 2 - 300 amu optional
Detectable Components:	Any gas or vapor with a molecular weight or fragment ion within the mass range
Number of Components:	Unlimited
Masses per Component:	Unlimited; allows multivariate analysis
Upper Detection Limit:	100%
Lower Detection Limit:	For components with no interference Faraday: 10 parts per million (ppm) Electron Multiplier: 10 parts per billion (ppb)*
Dynamic Range:	Faraday: 5 orders of magnitude (10^5) Dual Faraday/Multiplier: 8 orders of magnitude (10^8)
Analysis Rate:	Typically 400 milliseconds per component
Analysis Precision:	+/- 0.0025 absolute, based on a 1% Argon concentration with no interferences
Analysis Stability:	+/- 0.005 absolute, over 30 days, on a 1% Argon concentration with no interferences
Filaments:	Two, one active and one spare with automatic switchover for continuous operation
Sample Streams:	Unlimited
Trend/Display Windows:	Unlimited
Analysis Methods:	Unlimited
Sequence Methods:	Unlimited
Alarm Methods:	Unlimited
Derived Values:	Unlimited
Scanning Mode:	Capable of scanning user selected mass ranges or the entire analyzer mass range

*As documented on trace analysis of benzene in air

MAX300-IG Applications

Petrochemical

Acetic Acid ▪ Acrylonitrile
Ambient Air Monitoring ▪ Ammonia
Catalysis Research ▪ Ethylene
Ethylene Oxide ▪ Fuel Gas/Natural Gas
Hydrogen ▪ Methanol
Polyethylene/Polypropylene ▪ Vinyl Chloride

Metals Production

Basic Oxygen Process ▪ Blast Furnace
Carburization ▪ Coke Oven
Fuel Gas ▪ Gas Mixing Stations
Vacuum Decarburization

Pharmaceutical

Ambient Air Monitoring ▪ Dryers/Vacuum Dryers
Fermentation Headspace ▪ Lyophilizer Monitoring
Solvent Recovery ▪ Waste Water Analysis

Semiconductor/Gas Production

Ambient Air Monitoring ▪ Argon in Oxygen
Scrubber/Burnbox Efficiency
UHP Gas Impurities
Waste Water Analysis

Extrel
Core Mass Spectrometers

MAX300-IG

Extrel® MAX300™-IG Process Mass Spectrometer

Power:

Recommended Power Supply:	
110V Analyzer:	Two 115 VAC, 50/60 Hz, 15 Amp circuits
220V Analyzer:	One 230 VAC, 50/60 Hz, 20 Amp circuit
Output Power:	
Nominal:	2500 Watts
Maximum:	2750 Watts
Heat Load:	2500 Watts (~8500 BTU/Hr)

Typical Physical Dimensions:

Analyzer Weight:	Approximately 420 lbs (190 kg)
Cart Weight:	Approximately 40 lbs (18 kg)
Dimensions with A/C and Cart:	Height: 63.3" (161 cm) Depth: 25.25" (64 cm) Width: 47.8" (122 cm)

Ambient Requirements:

Ambient Temperature:	-4°F to 120°F (-20°C to 49°C) with A/C cold start ≥ 54°F (12°C)
Area Classifications:	General Purpose Class I, Division 2 Groups B, C, D, T3, Class I, Division 1 Groups B, C, D, T3 ATEX Zone 1, Group II B + H2, T4 (Refer to Product Note GP-214A)

Data System, Software and Communications:

Software:	Extrel Questor 5 Process Control Software, a web-based user interface
3 User Security Levels:	Administrator, User, Viewer
Display Unit:	Information and control is transmitted and displayed via Ethernet to a PC with Microsoft Windows® XP operating system and Internet Explorer® browser
Analog Inputs and Outputs:	Unlimited
Digital Inputs and Outputs:	Unlimited
Communications:	Ethernet, Bi-directional modbus RTU or TCP/IP, OPC and Analog Outputs

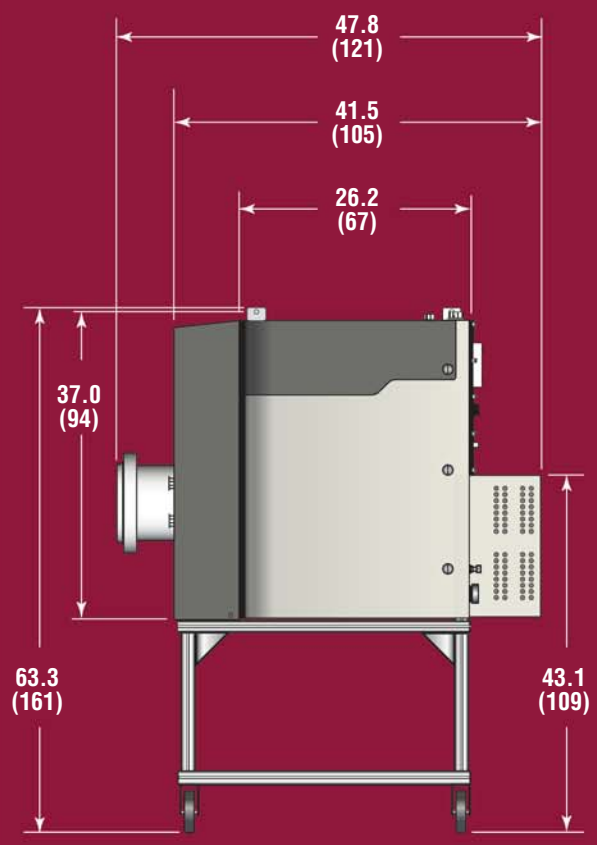

Dimensions in inches (cm)

Figure 1:
Front View
MAX300-IG with A/C and Cart

Extrel CMS maintains sales and service offices around the world.
Please contact us for the office nearest you or visit our web site.

Extrel CMS, LLC
575 Epsilon Drive Pittsburgh, PA 15238-2838 USA
Tel: +1.412.963.7530 Fax: +1.412.963.6578 E-mail: info@extrel.com
www.extrel.com

Copyright 2011 Extrel CMS, LLC

All specifications are subject to change without notice

Extrel Core Mass Spectrometers

QUALITY MANAGEMENT SYSTEM
CERTIFIED BY DNV
ISO 9001:2008

Extrel® is a registered trademark of Extrel CMS, LLC. • MAX300™ and Merlin Automation™ is a trademark of ExtrelCMS, LLC.
Windows and Internet Explorer® are registered trademark of Microsoft Corporation.